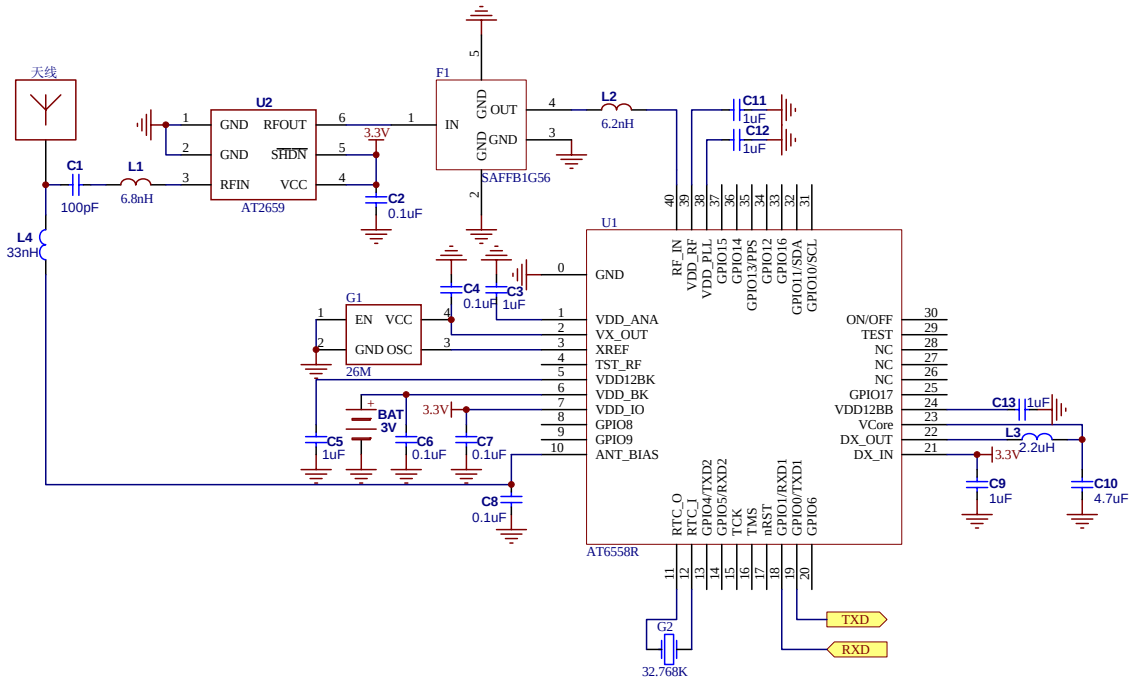
天线
C1
100pF
L1
6.8nH
L4
33nH
U2
GND
RFOUT
GND
SHDN
RFIN
VCC
AT2659
3.3V
C2
0.1uF
F1
IN
GND
OUT
GND
SAFFB1G56
L2
6.2nH
C11
1uF
C12
1uF
U1
GND
VDD_ANA
VX_OUT
XREF
TST_RF
VDD12BK
VDD_BK
VDD_IO
GPIO8
GPIO9
ANT_BIAS
RF_IN
VDD_RF
VDD_PLL
GPIO15
GPIO14
GPIO13/PPS
GPIO12
GPIO16
GPIO11/SDA
GPIO10/SCL
ON/OFF
TEST
NC
NC
NC
GPIO17
VDD12BB
VCore
DX_OUT
DX_IN
RTC_O
RTC_I
GPIO4/TXD2
GPIO5/RXD2
TCK
TMS
nRST
GPIO1/RXD1
GPIO0/TXD1
GPIO6
AT6558R
C4
0.1uF
C3
1uF
G1
EN
VCC
GND
OSC
26M
BAT
3V
C5
1uF
C6
0.1uF
C7
0.1uF
C8
0.1uF
C13
1uF
L3
2.2uH
C9
1uF
C10
4.7uF
G2
32.768K
TXD
RXD